Slot-type Photomicrosensor (Non-modulated) *1

EE-SX47/67

CSM_EE-SX47/67_DS_E_13_2

Global Standard Slot-type photomicrosensors with 50- to 100-mA direct switching capacity.

- Series includes models that enable switching between dark-ON and light-ON operation.
- Response frequency as high as 1 kHz.
- Easy operation monitoring with bright light indicator.
- Wide operating voltage range: 5 to 24 VDC
- Models in which the light indicator turns ON for dark-ON operation are also available.
- A wide range of variations in eight different shapes.
- Flexible robot cable is provided as a standard feature. *2

Be sure to read *Safety Precautions* on page 5.

*1. Pre-wired Models are available only in the EE-SX67 Series.
*2. Only for Pre-wired Models.

For the most recent information on models that have been certified for safety standards, refer to your OMRON website.

Ordering Information

Connector

Infrared light

Appearance	Sensing method	Connecting method	Sensing distance		Output configuration	Indicator mode	Model	
							NPN output	PNP output
Standard	Through-beam type (with slot)	Connector (4 poles)		5 mm (slot width)	Dark-ON/Light-ON (selectable) *3 *4	Incident light	**EE-SX670**	**EE-SX670P**
						No incident light	**EE-SX670A**	**EE-SX670R**
					Light-ON	Incident light	**EE-SX470**	---
L-shaped					Dark-ON/Light-ON (selectable) *3 *4	Incident light	**EE-SX671**	**EE-SX671P**
						No incident light	**EE-SX671A**	**EE-SX671R**
					Light-ON	Incident light	**EE-SX471**	---
T-shaped, slot center 7 mm					Dark-ON/Light-ON (selectable) *3 *4	Incident light	**EE-SX672**	**EE-SX672P**
						No incident light	**EE-SX672A**	**EE-SX672R**
					Light-ON	Incident light	**EE-SX472**	---
Close-mounting					Dark-ON/Light-ON (selectable) *3 *4	Incident light	**EE-SX673**	**EE-SX673P**
						No incident light	**EE-SX673A**	**EE-SX673R**
					Light-ON	Incident light	**EE-SX473**	---
Close-mounting					Dark-ON/Light-ON (selectable) *3 *4	Incident light	**EE-SX674**	**EE-SX674P**
						No incident light	**EE-SX674A**	**EE-SX674R**
					Light-ON	Incident light	**EE-SX474**	---
T-shaped, slot center 10 mm					Dark-ON/Light-ON (selectable) *3 *4	Incident light	**EE-SX675**	**EE-SX675P**
F-shaped					Dark-ON/Light-ON (selectable) *3 *4	Incident light	**EE-SX676**	**EE-SX676P**
R-shaped					Dark-ON/Light-ON (selectable) *3 *4	Incident light	**EE-SX677**	**EE-SX677P**

*3. Dark-ON when the L terminal of the connector is opened, and light-ON when the L terminal and positive (+) terminal are connected. Do not connect the L terminal to 0 V when using dark-ON operation. When using light-ON, it is useful to select the connector EE-1001-1. The L terminal and positive (+) terminal of this connector are connected in advance.
*4. If you do not use the L terminal wire ((2) pink) when you use a Connector with Cable for an EE-1006 or EE-1010-series Photomicrosensor, noise may affect the Photomicrosensor. To prevent the effects of noise, cut the unused L terminal wire at the base of the connector and wrap it with insulating tape to prevent it from coming in contact with other terminals.

Pre-wired Models

Infrared light

Appearance	Sensing method	Sensing distance		Output configuration	Indicator mode	Connecting method	Model	
							NPN output	PNP output
Standard	Through-beam type (with slot)		5 mm (slot width)	Dark-ON/ Light-ON (selectable) *1 *2	Incident light	Pre-wired Models (1m)	**EE-SX670-WR 1M**	**EE-SX670P-WR 1M**
L-shaped							**EE-SX671-WR 1M**	**EE-SX671P-WR 1M**
T-shaped, slot center 7 mm							**EE-SX672-WR 1M**	**EE-SX672P-WR 1M**
Close-mounting							**EE-SX673-WR 1M**	**EE-SX673P-WR 1M**
Close-mounting							**EE-SX674-WR 1M**	**EE-SX674P-WR 1M**
T-shaped, slot center 10 mm							**EE-SX675-WR 1M**	**EE-SX675P-WR 1M**
F-shaped							**EE-SX676-WR 1M**	**EE-SX676P-WR 1M**
R-shaped							**EE-SX677-WR 1M**	**EE-SX677P-WR 1M**

*1. Dark-ON operation can be used when the L terminal is left unconnected or Light-ON operation can be used when the L terminal and positive (+) terminal are connected to each other. Do not connect the L terminal to 0 V when using dark-ON operation.
*2. If you do not use the L terminal wire ((2) pink) when you use a Connector with Cable for an EE-1006 or EE-1010-series Photomicrosensor, noise may affect the Photomicrosensor. To prevent the effects of noise, cut the unused L terminal wire at the base of the connector and wrap it with insulating tape to prevent it from coming in contact with other terminals.

Accessories (Order Separately) Connector Models

Type		Cable length	Model	Remarks
Connector			**EE-1001**	
			EE-1001-1	L terminal and positive (+) terminal are already short-circuited.
			EE-1009 *	
	Connector with Cable	1 m	**EE-1006 1M**	
			EE-1010 1M *	
		2 m	**EE-1006 2M**	
			EE-1010 2M *	
	Connector with Robot Cable	1 m	**EE-1010-R 1M** *	
		2 m	**EE-1010-R 2M** *	
Connector Hold-down Clip			**EE-1006A**	Applicable Photomicrosensors For EE-SX670□ and 470□ only. (Can be used only with EE-1006 Connectors for the Photomicrosensors listed above.)

Note: For details, refer to the Photomicro Sensors Accessories on EE-□ which can be accessed from your OMRON website.
* EE-1009- or EE-1010-series Connectors have a builtin locking mechanism to prevent cable disconnection when only the cable is pulled. To remove the Connector from the Sensor, grip the top and bottom of the Connector firmly and push into the Sensor once before pulling out. The locking mechanism prevents the Connector from being removed by pulling on the cable only and enables removal only when the Connector (housing) is pulled.

Ratings and Specifications

Item		Type	Standard	L-shaped	T-shaped, slot center 7 mm	Close-mounting		T-shaped, slot center 10 mm	F-shaped	R-shaped
	NPN models	Connector models	EE-SX670 EE-SX670A EE-SX470	EE-SX671 EE-SX671A EE-SX471	EE-SX672 EE-SX672A EE-SX472	EE-SX673 EE-SX673A EE-SX473	EE-SX674 EE-SX674A EE-SX474	EE-SX675	EE-SX676	EE-SX677
		Pre-wired models	EE-SX670-WR	EE-SX671-WR	EE-SX672-WR	EE-SX673-WR	EE-SX674-WR	EE-SX675-WR	EE-SX676-WR	EE-SX677-WR
	PNP models	Connector models	EE-SX670P EE-SX670R	EE-SX671P EE-SX671R	EE-SX672P EE-SX672R	EE-SX673P EE-SX673R	EE-SX674P EE-SX674R	EE-SX675P	EE-SX676P	EE-SX677P
		Pre-wired models	EE-SX670P-WR	EE-SX671P-WR	EE-SX672P-WR	EE-SX673P-WR	EE-SX674P-WR	EE-SX675P-WR	EE-SX676P-WR	EE-SX677P-WR
Sensing distance			5 mm (slot width)							
Sensing object			Opaque: 2 × 0.8 mm min.							
Differential distance			0.025 mm							
Light source			Infrared LED with a peak wavelength of 940 nm							
Indicator *1			Light indicator (red) (turns ON when light is interrupted for models with A or R suffix)							
Supply voltage			5 to 24 VDC ±10%, ripple (p-p): 10% max.							
Current consumption			12 mA max. (Connector models, L terminal open), 35 mA max. (NPN pre-wired models), 30 mA max. (PNP pre-wired models)							
Control output			NPN open collector: 5 to 24 VDC, 100 mA max. 100 mA load current with a residual voltage of 0.8 V max. 40 mA load current with a residual voltage of 0.4 V max. OFF current (leakage current): 0.5 mA max. PNP open collector: 5 to 24 VDC, 50 mA max. 50 mA load current with a residual voltage of 1.3 V max. OFF current (leakage current): 0.5 mA max.							
Protection circuits			Load short circuit protection (Connector models), No circuit protection (Pre-wired models)							
Response frequency *2			1 kHz min. (3 kHz average)							
Ambient illumination			1,000 lx max. with fluorescent light on the surface of the receiver.							
Ambient temperature range			Operating: –25 to +55°C, Storage: –30 to +80°C (with no icing or condensation)							
Ambient humidity range			Operating: 5% to 85%, Storage: 5% to 95% (with no icing or condensation)							
Vibration resistance			Destruction: 20 to 2,000 Hz (peak acceleration: 100 m/s^2) 1.5-mm double amplitude for 2 h (4-min periods) each in X, Y, and Z directions							
Shock resistance			Destruction: 500 m/s^2 for 3 times each in X, Y, and Z directions							
Degree of protection			IEC60529 IP50							
Connecting method			Connector Models (direct soldering possible), Pre-wired Models (Standard cable length: 1 m), Models with Connectors (Standard cable length: 0.1 m)							
Weight	Connector models		Approx. 3.1 g	Approx. 3 g	Approx. 2.4 g	Approx. 2.3 g	Approx. 3 g	Approx. 2.7 g	Approx. 2.2 g	Approx. 2.2 g
	Pre-wired models		Approx. 18.9 g	Approx. 17.3 g	Approx. 17.8 g	Approx. 16.8 g	Approx. 17.1 g	Approx. 18.3 g	Approx. 16.9 g	Approx. 16.9 g
Material	Case		Polybutylene phthalate (PBT)							
	Cover		Polycarbonate							
	Emitter/receiver									

*1. The indicator is a GaP red LED (peak wavelength: 690 nm).
*2. The response frequency was measured by detecting the rotating disk shown at the right.

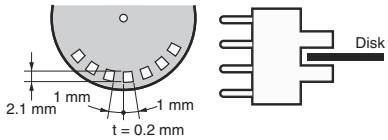

Engineering Data (Reference Value)

Sensing Position Characteristics
EE-SX47□/67□

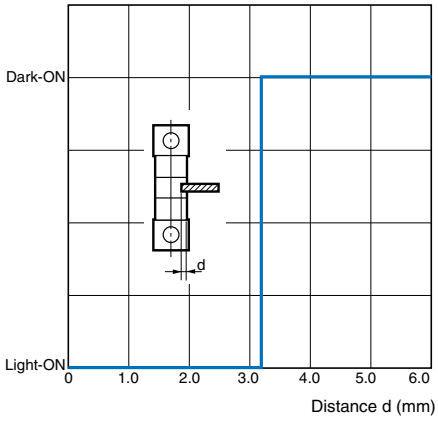

Sensing Position Characteristics
EE-SX47□/67□

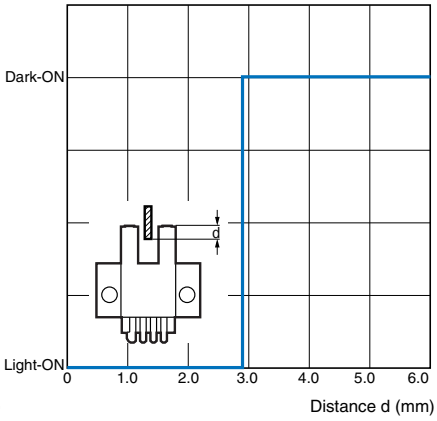

Repeated Sensing Position Characteristics
EE-SX47□/67□

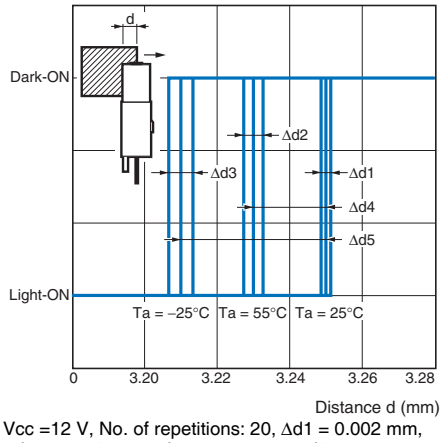

Vcc =12 V, No. of repetitions: 20, Δd1 = 0.002 mm, Δd2 = 0.004 mm, Δd3 = 0.005 mm, Δd4 = 0.02 mm, Δd5 = 0.04 mm

Note: The data applies to dark status. Operation may be affected by external light interference or light coming through the sensing object.

I/O Circuit Diagrams

NPN Output

Model	Output configuration	Timing charts	Terminal connections	Output circuit
EE-SX67□ EE-SX67□-WR	Light-ON	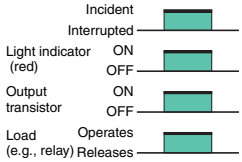	Short-circuited between Ⓛ terminal and positive ⊕ terminal	**EE-SX67□** **EE-SX67□A** 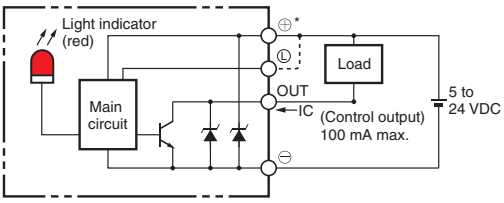 *The terminal arrangement depends on the model. Check the dimensional diagrams.
	Dark-ON	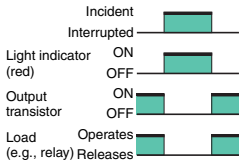	Open between Ⓛ terminal and positive ⊕ terminal *1 *2	
EE-SX670A EE-SX671A EE-SX672A EE-SX673A EE-SX674A	Light-ON	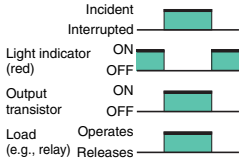	Short-circuited between Ⓛ terminal and positive ⊕ terminal	**EE-SX67□-WR** 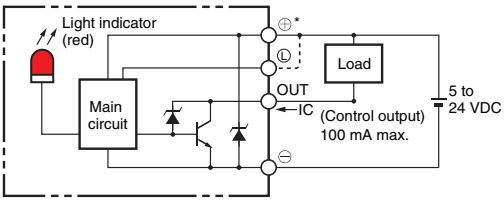 *The terminal arrangement depends on the model. Check the dimensional diagrams.
	Dark-ON	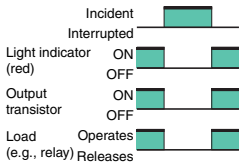	Open between Ⓛ terminal and positive ⊕ terminal *1 *2	
EE-SX470 EE-SX471 EE-SX472 EE-SX473 EE-SX474	Light-ON	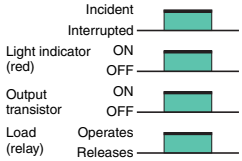	---	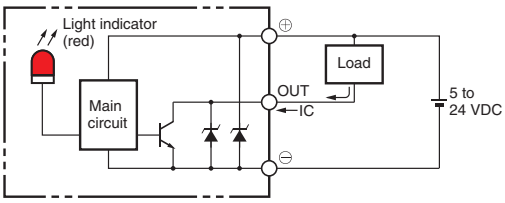

*1. Do not connect the L terminal to 0 V when using dark-ON operation.
*2. If you do not use the L terminal wire ((2) pink) when you use a Connector with Cable for an EE-1006 or EE-1010-series Photomicrosensor, noise may affect the Photomicrosensor. To prevent the effects of noise, cut the unused L terminal wire at the base of the connector and wrap it with insulating tape to prevent it from coming in contact with other terminals.

PNP Output

Model	Output configuration	Timing charts	Terminal connections	Output circuit
EE-SX67□P EE-SX67□P-WR	Light-ON	Incident / Interrupted Light indicator (red): ON / OFF Output transistor: ON / OFF Load (relay): Operates / Releases	Short-circuited between Ⓛ terminal and positive ⊕ terminal	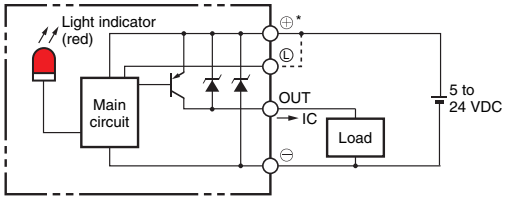 *The terminal arrangement depends on the model. Check the dimensional diagrams.
	Dark-ON	Incident / Interrupted Light indicator (red): ON / OFF Output transistor: ON / OFF Load (relay): Operates / Releases	Open between Ⓛ terminal and positive ⊕ terminal *1 *2	
EE-SX670R EE-SX671R EE-SX672R EE-SX673R EE-SX674R	Light-ON	Incident / Interrupted Light indicator (red): ON / OFF Output transistor: ON / OFF Load (e.g., relay): Operates / Releases	Short-circuited between Ⓛ terminal and positive ⊕ terminal	
	Dark-ON	Incident / Interrupted Light indicator (red): ON / OFF Output transistor: ON / OFF Load (e.g., relay): Operates / Releases	Open between Ⓛ terminal and positive ⊕ terminal *1 *2	

*1. Do not connect the L terminal to 0 V when using dark-ON operation.
*2. If you do not use the L terminal wire ((2) pink) when you use a Connector with Cable for an EE-1006 or EE-1010-series Photomicrosensor, noise may affect the Photomicrosensor. To prevent the effects of noise, cut the unused L terminal wire at the base of the connector and wrap it with insulating tape to prevent it from coming in contact with other terminals.

Safety Precautions

Refer to *Warranty and Limitations of Liability*.

⚠ WARNING

This product is not designed or rated for ensuring safety of persons either directly or indirectly. Do not use it for such purposes.

Precautions for Safe Use

● Operating Environment

These Photomicrosensors have an IP50 (conforms to IEC) enclosure and do not have a water-proof or dust-proof structure. Therefore, do not use them in applications in which the sensor will be subjected to splashes from water, oil, or any other liquid. Liquid entering the Sensor may result in malfunction.

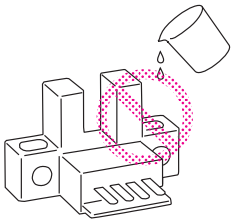

Precautions for Correct Use

Make sure that this product is used within the rated ambient environment conditions.

● Installation

- When direct soldering to the terminals, use the following guidelines.

Soldering Conditions

Item	Temperature	Permissible time	Remarks
Soldering iron	350°C max.	3 s max.	The portion between the base of the terminals and the position 1.5 mm from the terminal base must not be soldered.

- The terminal base uses a polycarbonate resin, which could be deformed by excessive soldering heat, resulting in damage to the product's functionality.

● Lot Number and Model Number Legend

In the following diagrams, 343U indicates the lot number and factory where the product was manufactured. Do not include this code with the model number when ordering.
The QR code on connector models is used by OMRON only.

EE-SX□70□

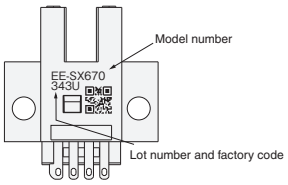

(Unit: mm)

Dimensions

Tolerance class IT16 applies to dimensions in this datasheet unless otherwise specified.

Sensors

EE-SX670/670P
EE-SX670A/670R
EE-SX470

Terminal Arrangement

(1)	⊕	Vcc
(2)	L	L*
(3)	OUT	OUTPUT
(4)	⊖	GND (0 V)

* Pin 2 is not used for the EE-SX470.

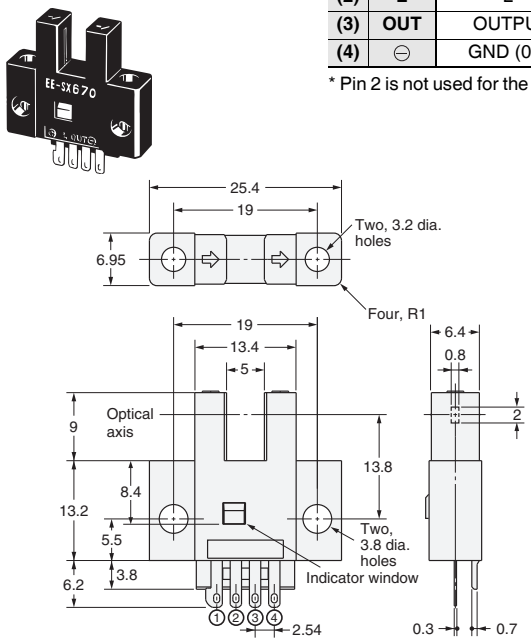

EE-SX671/671P
EE-SX671A/671R
EE-SX471

Terminal Arrangement

(1)	⊕	Vcc
(2)	L	L*
(3)	OUT	OUTPUT
(4)	⊖	GND (0 V)

* Pin 2 is not used for the EE-SX471.

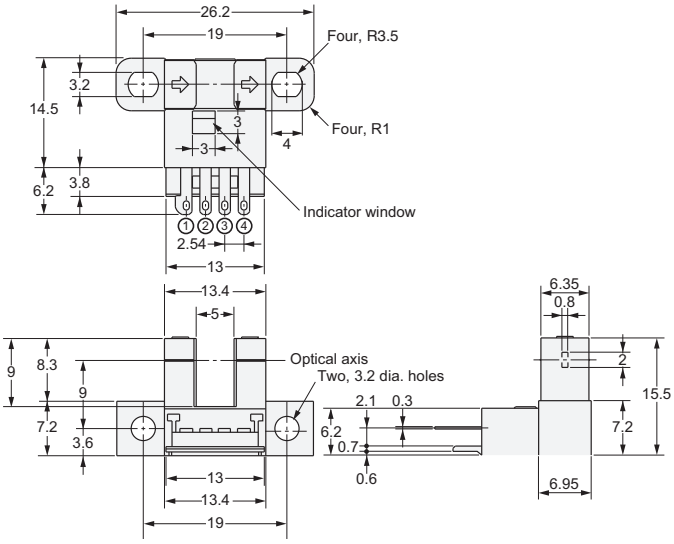

EE-SX672/672P
EE-SX672A/672R
EE-SX472

Terminal Arrangement

(1)	⊕	Vcc
(2)	L	L*
(3)	OUT	OUTPUT
(4)	⊖	GND (0 V)

* Pin 2 is not used for the EE-SX472.

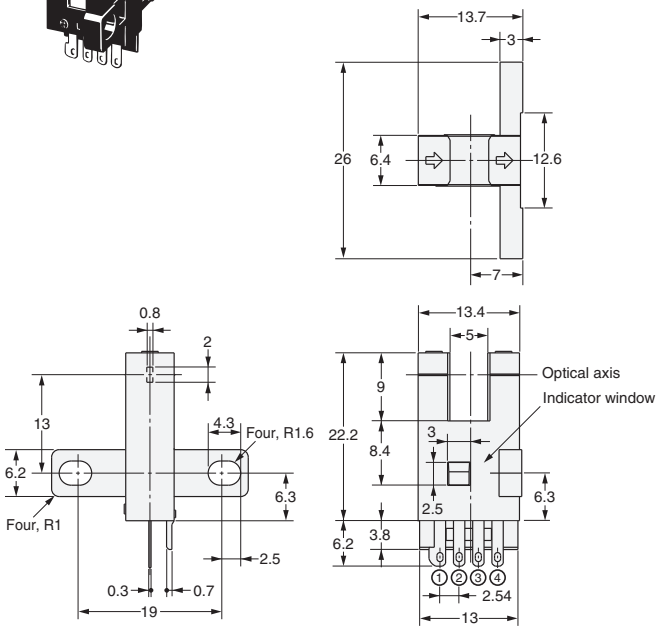

EE-SX673/673P
EE-SX673A/673R
EE-SX473

Terminal Arrangement

(1)	⊕	Vcc
(2)	L	L*
(3)	OUT	OUTPUT
(4)	⊖	GND (0 V)

* Pin 2 is not used for the EE-SX473.

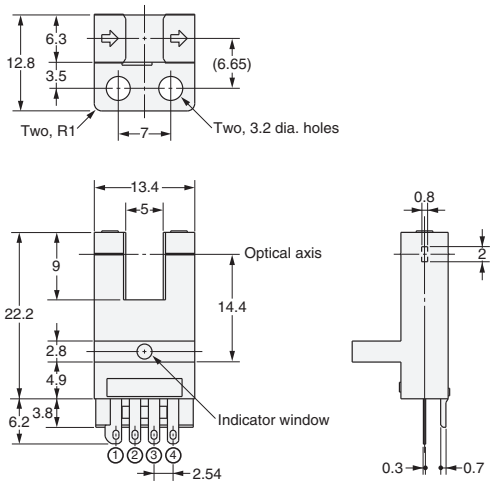

EE-SX674/674P
EE-SX674A/674R
EE-SX474

Terminal Arrangement

(1)	⊕	Vcc
(2)	L	L*
(3)	OUT	OUTPUT
(4)	⊖	GND (0 V)

* Pin 2 is not used for the EE-SX474.

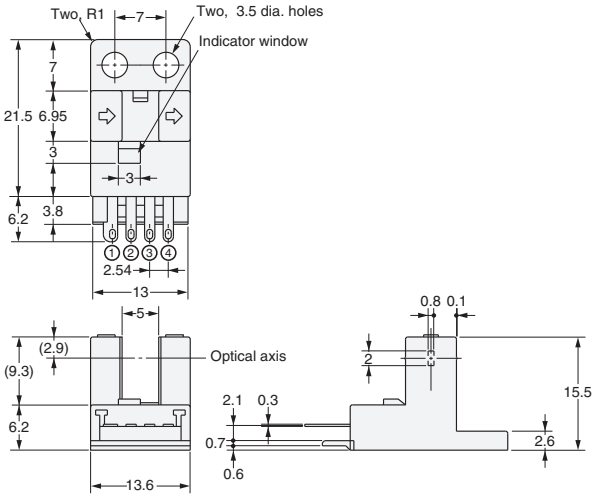

EE-SX675/675P

Terminal Arrangement

(1)	⊕	Vcc
(2)	L	L
(3)	OUT	OUTPUT
(4)	⊖	GND (0 V)

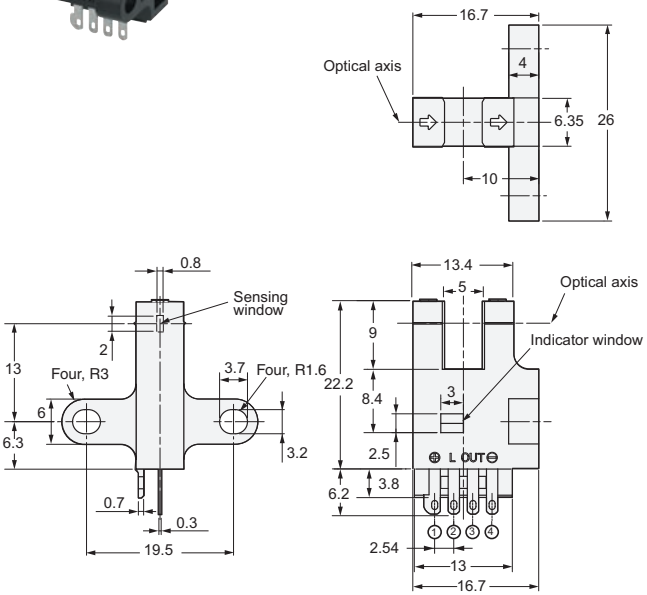

EE-SX676/676P

Terminal Arrangement

(1)	⊕	Vcc
(2)	L	L
(3)	OUT	OUTPUT
(4)	⊖	GND (0 V)

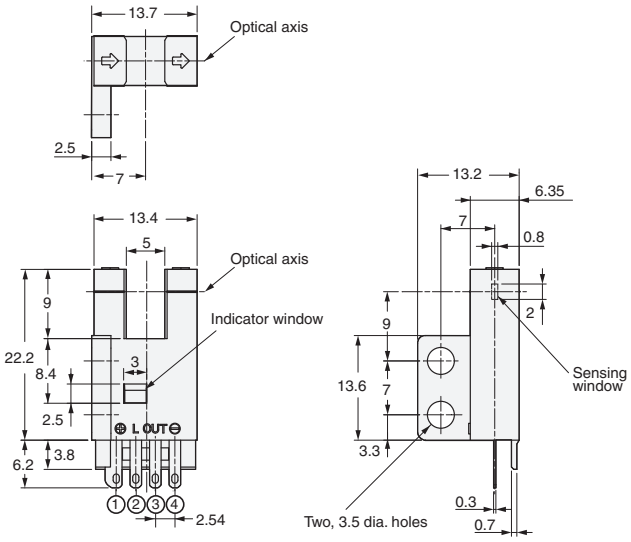

EE-SX677/677P

Terminal Arrangement

(1)	⊕	Vcc
(2)	L	L
(3)	OUT	OUTPUT
(4)	⊖	GND (0 V)

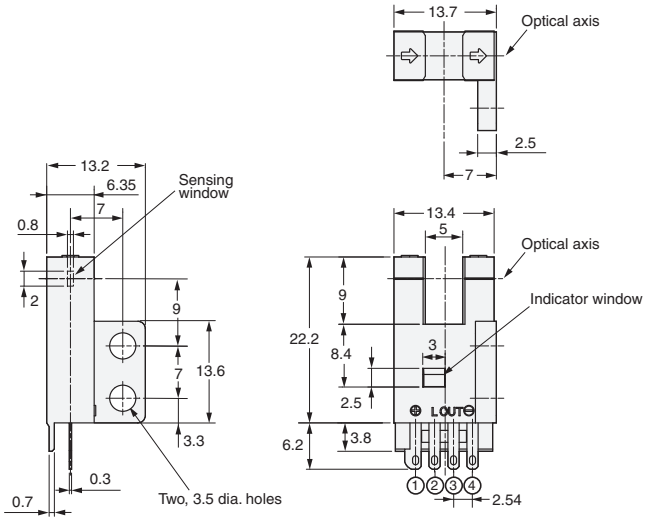

EE-SX670-WR/670P-WR

Terminal Arrangement

Brown	Vcc
Pink	L
Blue	GND (0 V)
Black	OUTPUT

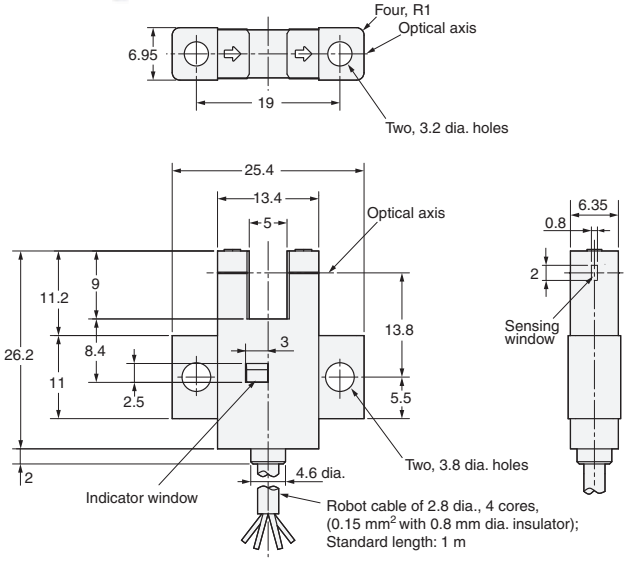

EE-SX671-WR/671P-WR

Terminal Arrangement

Brown	Vcc
Pink	L
Blue	GND (0 V)
Black	OUTPUT

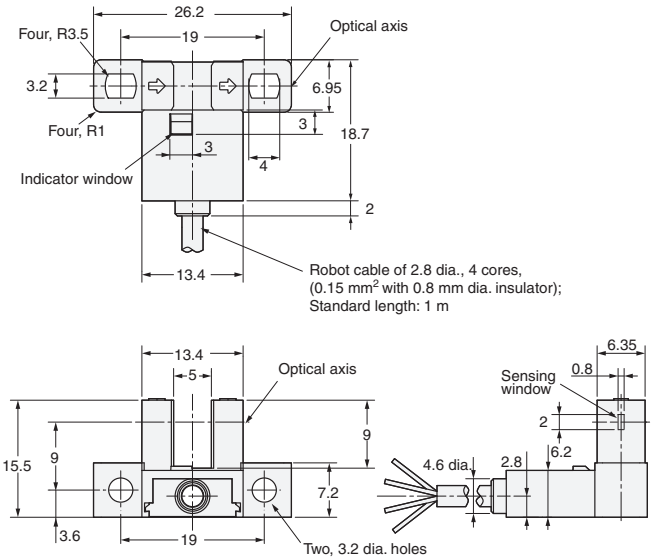

EE-SX672-WR/672P-WR

Terminal Arrangement

Brown	Vcc
Pink	L
Blue	GND (0 V)
Black	OUTPUT

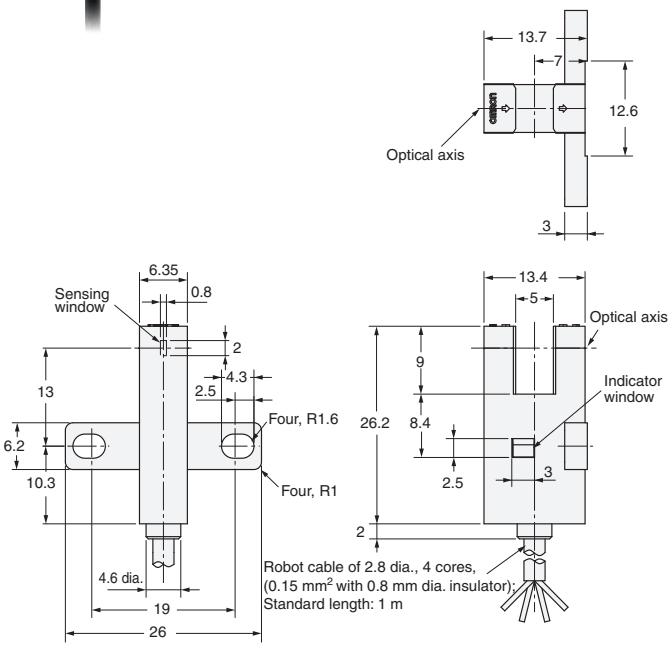

EE-SX673-WR/673P-WR

Terminal Arrangement

Brown	Vcc
Pink	L
Blue	GND (0 V)
Black	OUTPUT

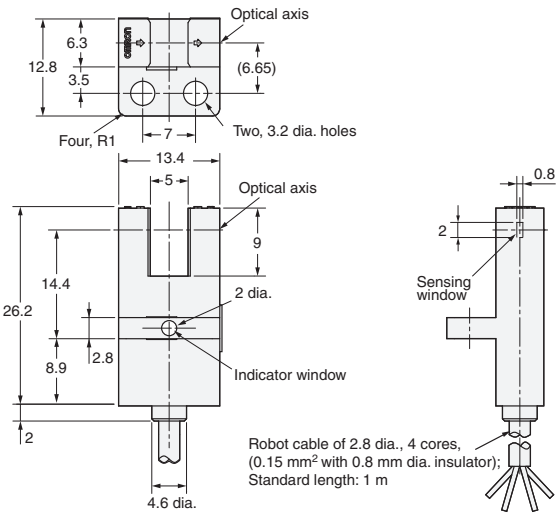

EE-SX674-WR/674P-WR

Terminal Arrangement

Brown	Vcc
Pink	L
Blue	GND(0V)
Black	OUTPUT

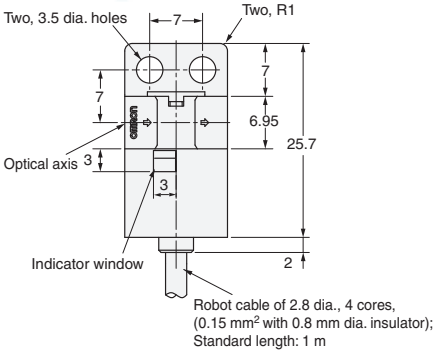

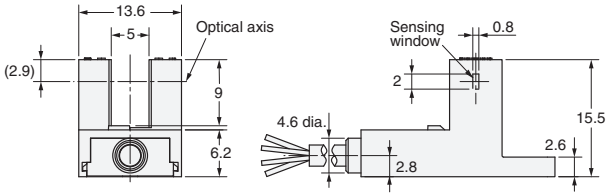

EE-SX675-WR/675P-WR

Terminal Arrangement

Brown	Vcc
Pink	L
Blue	GND(0V)
Black	OUTPUT

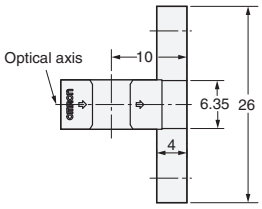

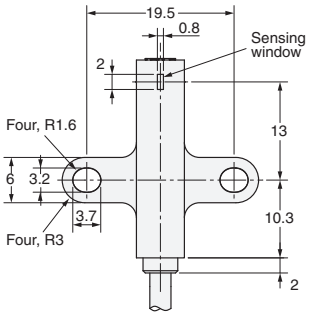

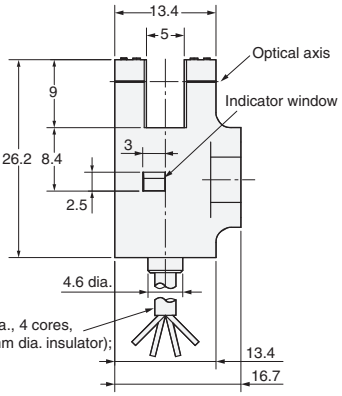

EE-SX676-WR/676P-WR

Terminal Arrangement

Brown	Vcc
Pink	L
Blue	GND(0V)
Black	OUTPUT

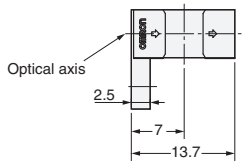

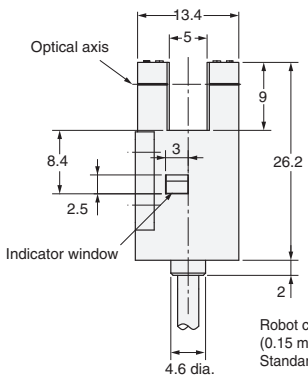

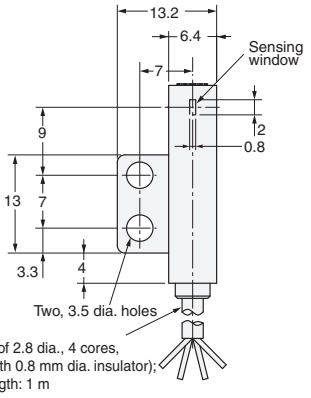

EE-SX677-WR/677P-WR

Terminal Arrangement

Brown	Vcc
Pink	L
Blue	GND(0V)
Black	OUTPUT

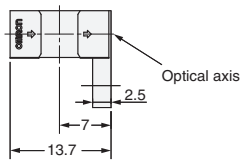

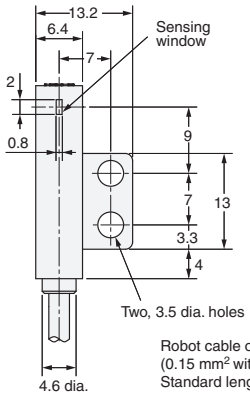

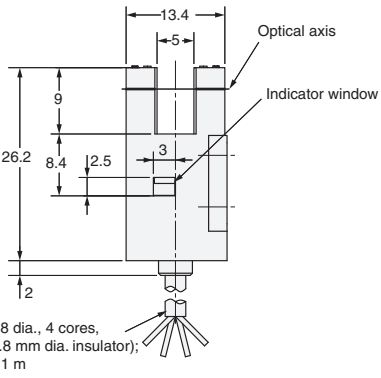

Terms and Conditions Agreement

Read and understand this catalog.
Please read and understand this catalog before purchasing the products. Please consult your OMRON representative if you have any questions or comments.

Warranties.
(a) Exclusive Warranty. Omron's exclusive warranty is that the Products will be free from defects in materials and workmanship for a period of twelve months from the date of sale by Omron (or such other period expressed in writing by Omron). Omron disclaims all other warranties, express or implied.
(b) Limitations. OMRON MAKES NO WARRANTY OR REPRESENTATION, EXPRESS OR IMPLIED, ABOUT NON-INFRINGEMENT, MERCHANTABILITY OR FITNESS FOR A PARTICULAR PURPOSE OF THE PRODUCTS. BUYER ACKNOWLEDGES THAT IT ALONE HAS DETERMINED THAT THE
PRODUCTS WILL SUITABLY MEET THE REQUIREMENTS OF THEIR INTENDED USE.
Omron further disclaims all warranties and responsibility of any type for claims or expenses based on infringement by the Products or otherwise of any intellectual property right. (c) Buyer Remedy. Omron's sole obligation hereunder shall be, at Omron's election, to (i) replace (in the form originally shipped with Buyer responsible for labor charges for removal or replacement thereof) the non-complying Product, (ii) repair the non-complying Product, or (iii) repay or credit Buyer an amount equal to the purchase price of the non-complying Product; provided that in no event shall Omron be responsible for warranty, repair, indemnity or any other claims or expenses regarding the Products unless Omron's analysis confirms that the Products were properly handled, stored, installed and maintained and not subject to contamination, abuse, misuse or inappropriate modification. Return of any Products by Buyer must be approved in writing by Omron before shipment. Omron Companies shall not be liable for the suitability or unsuitability or the results from the use of Products in combination with any electrical or electronic components, circuits, system assemblies or any other materials or substances or environments. Any advice, recommendations or information given orally or in writing, are not to be construed as an amendment or addition to the above warranty.
See http://www.omron.com/global/ or contact your Omron representative for published information.

Limitation on Liability; Etc.
OMRON COMPANIES SHALL NOT BE LIABLE FOR SPECIAL, INDIRECT, INCIDENTAL, OR CONSEQUENTIAL DAMAGES, LOSS OF PROFITS OR PRODUCTION OR COMMERCIAL LOSS IN ANY WAY CONNECTED WITH THE PRODUCTS, WHETHER SUCH CLAIM IS BASED IN CONTRACT, WARRANTY, NEGLIGENCE OR STRICT LIABILITY.
Further, in no event shall liability of Omron Companies exceed the individual price of the Product on which liability is asserted.

Suitability of Use.
Omron Companies shall not be responsible for conformity with any standards, codes or regulations which apply to the combination of the Product in the Buyer's application or use of the Product. At Buyer's request, Omron will provide applicable third party certification documents identifying ratings and limitations of use which apply to the Product. This information by itself is not sufficient for a complete determination of the suitability of the Product in combination with the end product, machine, system, or other application or use. Buyer shall be solely responsible for determining appropriateness of the particular Product with respect to Buyer's application, product or system. Buyer shall take application responsibility in all cases.
NEVER USE THE PRODUCT FOR AN APPLICATION INVOLVING SERIOUS RISK TO LIFE OR PROPERTY OR IN LARGE QUANTITIES WITHOUT ENSURING THAT THE SYSTEM AS A WHOLE HAS BEEN DESIGNED TO ADDRESS THE RISKS, AND THAT THE OMRON PRODUCT(S) IS PROPERLY RATED AND INSTALLED FOR THE INTENDED USE WITHIN THE OVERALL EQUIPMENT OR SYSTEM.

Programmable Products.
Omron Companies shall not be responsible for the user's programming of a programmable Product, or any consequence thereof.

Performance Data.
Data presented in Omron Company websites, catalogs and other materials is provided as a guide for the user in determining suitability and does not constitute a warranty. It may represent the result of Omron's test conditions, and the user must correlate it to actual application requirements. Actual performance is subject to the Omron's Warranty and Limitations of Liability.

Change in Specifications.
Product specifications and accessories may be changed at any time based on improvements and other reasons. It is our practice to change part numbers when published ratings or features are changed, or when significant construction changes are made. However, some specifications of the Product may be changed without any notice. When in doubt, special part numbers may be assigned to fix or establish key specifications for your application. Please consult with your Omron's representative at any time to confirm actual specifications of purchased Product.

Errors and Omissions.
Information presented by Omron Companies has been checked and is believed to be accurate; however, no responsibility is assumed for clerical, typographical or proofreading errors or omissions.

2017.7

In the interest of product improvement, specifications are subject to change without notice.

OMRON Corporation
Industrial Automation Company

http://www.ia.omron.com/

(c)Copyright OMRON Corporation 2017 All Right Reserved.

Mouser Electronics

Authorized Distributor

Click to View Pricing, Inventory, Delivery & Lifecycle Information:

Omron:

EE-SX677P EE-SX677P-WR 1M

Мы молодая и активно развивающаяся компания в области поставок электронных компонентов. Мы поставляем электронные компоненты отечественного и импортного производства напрямую от производителей и с крупнейших складов мира.

Благодаря сотрудничеству с мировыми поставщиками мы осуществляем комплексные и плановые поставки широчайшего спектра электронных компонентов.

Собственная эффективная логистика и склад в обеспечивает надежную поставку продукции в точно указанные сроки по всей России.

Мы осуществляем техническую поддержку нашим клиентам и предпродажную проверку качества продукции. На все поставляемые продукты мы предоставляем гарантию .

Осуществляем поставки продукции под контролем ВП МО РФ на предприятия военно-промышленного комплекса России , а также работаем в рамках 275 ФЗ с открытием отдельных счетов в уполномоченном банке. Система менеджмента качества компании соответствует требованиям ГОСТ ISO 9001.

Минимальные сроки поставки, гибкие цены, неограниченный ассортимент и индивидуальный подход к клиентам являются основой для выстраивания долгосрочного и эффективного сотрудничества с предприятиями радиоэлектронной промышленности, предприятиями ВПК и научно-исследовательскими институтами России.

С нами вы становитесь еще успешнее!

Наши контакты:

Телефон: +7 812 627 14 35

Электронная почта: sales@st-electron.ru

Адрес: 198099, Санкт-Петербург, Промышленная ул, дом № 19, литера Н, помещение 100-Н Офис 331